New formulae to assess soil permeability through laboratory identification and flow coming out of vertical drains

J.C. GRESS
Soil improvement professor
Ecole Nationale des Travaux Publics de l'Etat – Lyon – France

ABSTRACT : mastering a lot of landslides through deep dewatering drainage by one or more lines of drains, being pumped either by siphoning pipes or by electropneumatic pumps®, it has appeared to us that water tests were not reliable for different reasons. We suggest here a procedure through laboratory identification tests and new formulae to assess the permeability, we can wait for, and a new formula to assess the flow which will come out of a line of vertical drains in a slope.

RESUME : maîtrisant un grand nombre de glissements de terrain par drainage profond par une ou plusieurs lignes de drains verticaux, soit pompés par des ombilics de siphonage, soit par des pompes électropneumatiques®, il nous est apparu que les essais d'eau préalables étaient peu fiables, pour différentes raisons. Nous proposons ici une approche par des essais en laboratoire et de nouvelles relations pour estimer la perméabilité à attendre et une nouvelle relation permettant d'estimer le débit d'une ligne de drains verticaux dans une pente.

1 INTRODUCTION

For past twenty years, the mastering of landslides, in France, has taken great benefit of the experience of a great number of works of deep drainage through siphon drains® or electropneumatic drains®.

But it has clearly demonstrate that it was difficult to have a good estimation of the flow, we could wait for. After having analysed why, we suggest hereunder new formulae, in order to have a better approach of deep drainage efficiency through lines of vertical drains, formulae to assess soil permeability through identification tests and a formula to assess flow coming out of vertical drains in a slope.

2 BASIC PRINCIPLES OF VERTICAL DRAINS

Lines of vertical drains are placed, on the site, in order to dewater the landslide and stop the instability.

These drains, with an average spacement of 5 meters must:

- reach the aquifers to be drained,
- be bored with the good tools, in order to avoid the decrease of permeability,
- must be equipped like wells (proper slotted pipes, filter).

The efficiency between adjacent drains must be designed; this will lead to a better assessment of the spacing between drains.

If the wanted drawdown, under the soil surface, is less than eleven meters, then the drain will be pumped through siphoning pipes, a hydraulic accumulator, equipped with a flushing system, regulating the flow above the critical one.

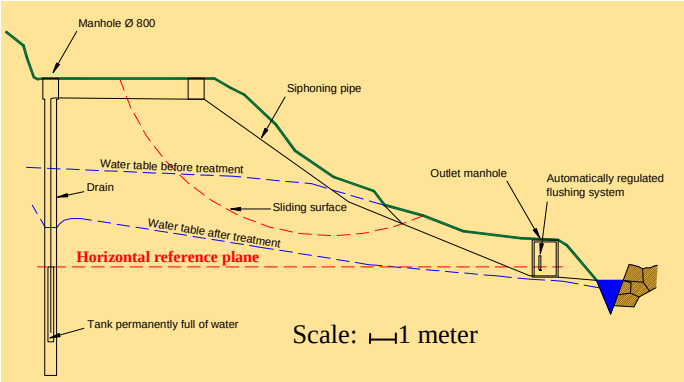

Figure 1. Cross section through a siphon drain®.

If it is greater, then we use electropneumatic pumps®, air under pressure being fed by a compressor placed in a chamber, the pump being equipped with a sensor, analysing if the pump is empty or full and then regulating the feeding with air.

Then, we can pump up to depth of 100 meters.

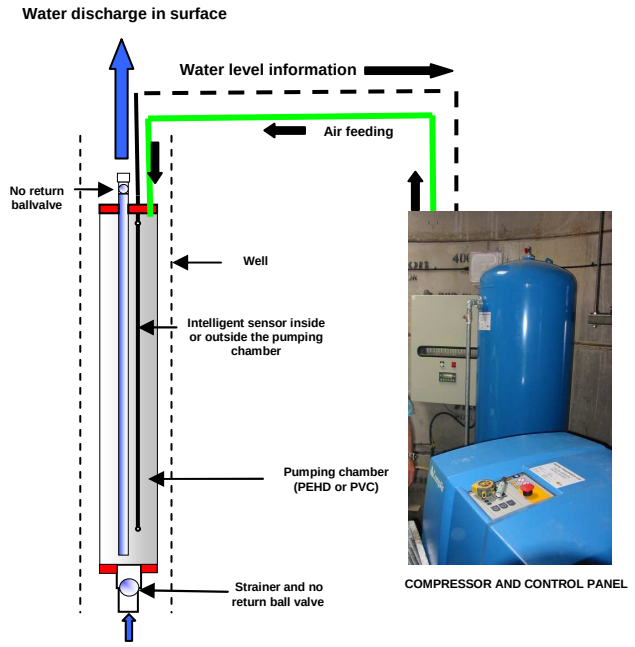

Figure 2. Electropneumatic pump® and view of the compressor chamber.

3 CLASSICAL MEASUREMENTS OF THE PERMEABILITY

In order to study the feasibility of such dewatering scheme, there is always a preliminary geotechnical and hydrogeological study with borings, samplings, laboratory tests and water tests on site and in the laboratory.

It appears very often that water tests didn't give a good order of the real permeability, because of:

- bit to do the boring being not the good one,
- too small diameter,
- water test run in an injection way and not in a pumping way,
- had we to run a Lefranc or Nasberg test?

These difficulties can be mastered. But it stays the major difficulty, that is to say, that the permeability is not homogeneous and can vary vertically through the same geological layer, due to the variation of the clayey fraction or to the superposition of layers of sand and clay, the thickness of these layers being maybe less than decimetric.

To put this in evidence, the best thing is to do intact continuous samplings and to analyse the variation of density, granulometry and qualify the activity of clay through Atterberg limits or methylene blue tests. We have then tried to obtain formulae giving a rough assessment of permeability through the different parameters measured.

4 ASSESSMENT OF THE PERMEABILITY THROUGH SOIL IDENTIFICATION PARAMETERS

There are not much formulae allowing us to have a good assessment of the permeability, these formulae working for gravely soils to clay.

The Hazen formula is well known:

$$k = K\,(D_{10})^2 \qquad (1)$$

k in cm/s and D_{10} being the diameter in cm of the screen allowing ten per cent in weight of the soil to go through. But it works only for sands and sandy gravels.

The oedometer formula:

$$\Delta \log k = Ck\,\Delta e \qquad (2)$$

with $Ck \approx 0.5\ e_o$ (Tavenas, F. et al. 1983) is giving only a variation of *k* with the void index *e* for clayey soils.

We have worked on correlations, we had through water tests and identification tests of different soils and on the works of Nagaraj et al. 1986 and Sivapullaiah P.V., et al. 2000.

It appears that the formulae proposed hereunder fits relatively well, correlating $log_{10}k$ with W_L = liquidity limit, when the particle of the soil have a maximum size of 400µm; otherwise, *VBS* = methylene blue value of the total soil; *e* = void index, %2µ = percent finer than 2µm.

The methylene blue value is very frequently measured in France. The methylene blue value of the 0/400µm fraction is well correlated to the plasticity index *Ip* and to the liquidity limit W_L :

$$Ip \approx 0.045\ VB\ 0400\mu, \qquad (3)$$

$$WL \approx 0.14 + 0.063\ VB0400\mu, \qquad (4)$$

the methylene blue value of a granulometric portion *o/d* being linked to the percent finer than *d* through the formulae :

$$VBod \times \%\ od = VB0400\mu \times \%\ 400\mu = VB\ 02\mu \times \%\ 2\mu \qquad (5)$$

When the maximum size of the soil particle is 400µm, we propose the formulae hereunder, in order to have a rough estimation of soil permeability :

if WL < 0.25

$$\log k = -\,(1.41 + 25.55\ W_L) + (4.46 - 3.5\ W_L)\ e \qquad (6)$$

if 0.25 ≤ WL < 0.80

$$\log k = -\,(5.23 + 9.2\ W_L) + (4.6 - 4.11\ W_L)\ e \qquad (7)$$

When the maximum size D of the particles is greater than 400µm, then we propose :

if VBS < 1.5

$$\log k = -(4.99 + 1.61\,VBS) + (3.97 - 0.22\,VBS)\,e \qquad (8)$$

if 1.5 ≤ VBS < 10

$$\log k = -(6.52 + 0.58\,VBS) + (4.03 - 0.259\,VBS)\,e \qquad (9)$$

where *VBS* is the methylene blue value of the total soil.

We can then with these formulae, through simple laboratory tests, check the in-situ water tests and have a relatively better knowledge of the different levels of permeability.

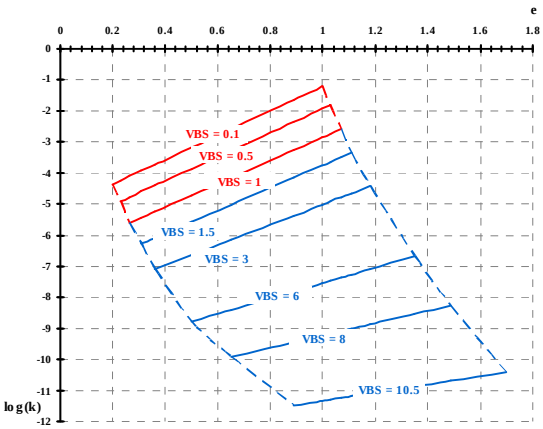

Figure 3. Values of $\log_{10}k$ with e and VBS.

5 NEW FORMULA TO ASSESS THE FLOW COMING OUT OF THE DRAINS

For a line of drains, dewatering an horizontal piezometric surface, for an unconfined aquifer, the flow of each drain is given by:

$$H^2 - h_w^2 = \frac{2Q_w L}{ka} + \frac{Q_w}{\pi k} \mathrm{Ln}\left(\frac{a}{2\pi r_w}\right) \qquad (10)$$

where Q_w = flow coming out of each well; r_w = radius of each well; k = permeability of the aquifer; a = distance between each drain.

Each drain penetrating totally the aquifer, and a feeding line being located at a distance L:

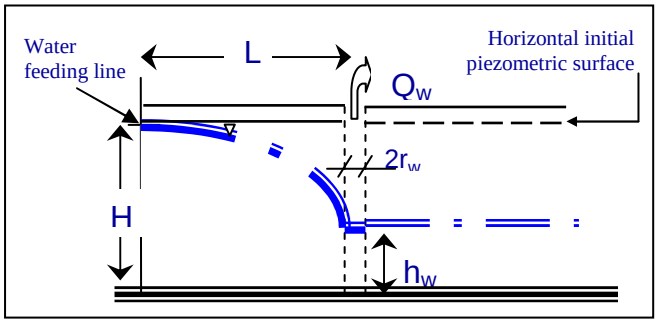

Figure 4. Cross section after dewatering (horizontal initial piezometric surface).

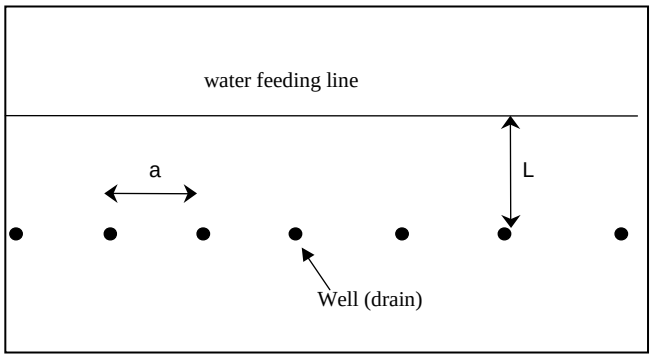

Figure 5. Overview of a set of drains.

In case of an inclined piezometric surface having an initial p_o slope, we propose this formula:

$$q_w = \frac{H_o^2 - h_w^2}{\dfrac{H_o + h_w}{a\,p_o k} + \dfrac{1}{\pi k}\mathrm{LN}\left(\dfrac{a}{2\pi\, r_w}\right)} \qquad (11)$$

where H_o = total initial height of the sheet of water; h_w = thickness of the dewatered sheet; p_o = initial slope of piezometric surface; a = distance between each drain; k = permeability; r_w = radius of the drain.

The initial upstream flow q_o is equal to p_o H_o k. The flow coming out of the vertical drains per meter of line is equal to : $q_1 = \dfrac{Q_w}{a}$. The downstream flow q_2 is equal to $q_0 - q_1$.

The substratum is supposed to be horizontal.

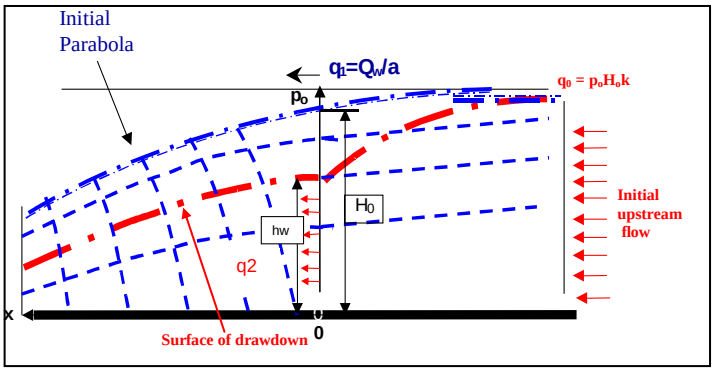

Figure 6. Cross section after dewatering (surface of drawdown).

Example. If:

H_o = 20 m
h_w = 10 m
p_o = 8 %
a = 5 m
k = 5 x 10^{-6} m/s
r_w = 0.08 m
then Q_w = 71 liters per hour

6 CONCLUSIONS

Vertical drains, either drained by siphoning pipes® or electropneumatic pumps®, have allowed the stabilization of more than two hundred lanslides, these last twenty years.

The hereabove proposed formulae of the permeability and of the flow coming out of the drains should lead to an improvement in the design of the scheme of drains, these formulea having to be adjusted to the further experience of new works.

7 REFERENCES

Bomont, S. 2002. Drainage with electropneumatic drains®. Conference JNGG 2002. Nancy, France.

Bomont, S. 2004. Back experience from four landslides stabilized through lines of siphon drains® in Normandy, France. 9th International Symposium on Landslides 2004. ISL Rio.

Bomont, S.et al. 2005. Two applications for deep drainage using siphon and electropneumatic drains®. Slope works for Castlehaven Coast Protection Scheme, Isle of Wight (UK) and slope stabilisation for the Railways Agency, France. In, Proceedings of the International Conference on Landslide Risk Management. 18th Annual Vancouver Geotechnical Society Symposium.

Clark, A.R. et al. 2002. The planning and development of a coast protection scheme in an environmentally sensitive area at Castlehaven, Isle of Wight. Proc. Int Conf on Instability, Planning & Management, Thomas Telford, 2002.

Clark, A.R. et al. 2007. Allowing for climate change; an innovative solution to landslide stabilisation in an environmentally sensitive area on the Isle of Wight International Conference on‘Landslides and Climate Change- Challenges and Solutions’Ventnor, Isle of Wight, UK.

Gress, J.C. 1996. Dewatering a landslip through siphoning drain®. Ten years experiences. Proc 7th International Symposium on Landslide. Trondheim.

Gress, J.C. 2002. Two sliding zones stabilized through siphon drains®. International conference on Landslide, slope stability of infrastructures. Singapor.

Nagaraj, T.S. et al. 1993. Stress state - permeability relation for fine grained soils. Geotechnical (43) : 333 – 336.

Mitchell, J.K. 1993. Fundamentals of soil behavior. 2nd ed. John Wiley & Sons, Inc., New York.

Pandian, N.S. et al. 1995. Permeability and compressibiliy behavior of bentonite – sand/soil mixes. Geotechnical Testing Journal (18) : 86 – 93.

Sivapullaiah, P.V. et al. 2000. Hydraulic conductivity of benton. Canadian Geotechnical Journal (37) : 406 – 413.

Tavenas, F. et al. 1987. State of the Art on Laboratory and in situ stress strain time behavior of soft clays. Laval University.